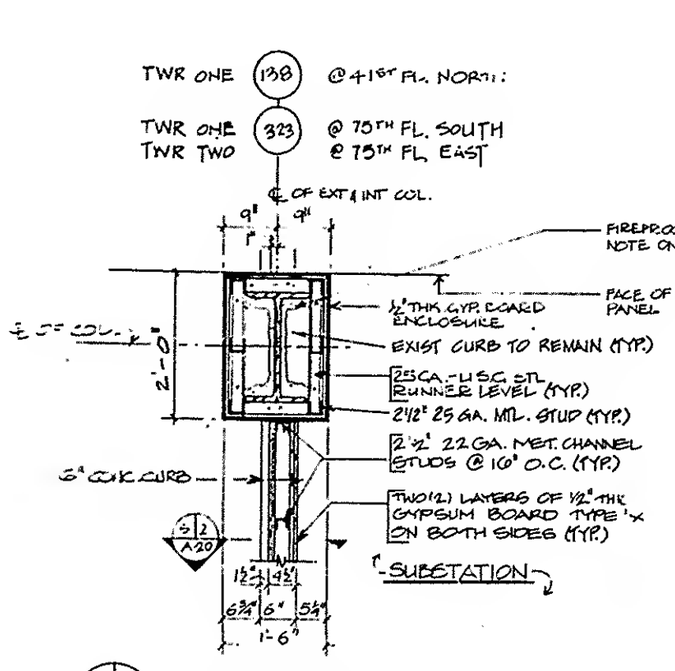

D 1 — CORNER DETAIL

SCALE IN FEET 0 1 2 3

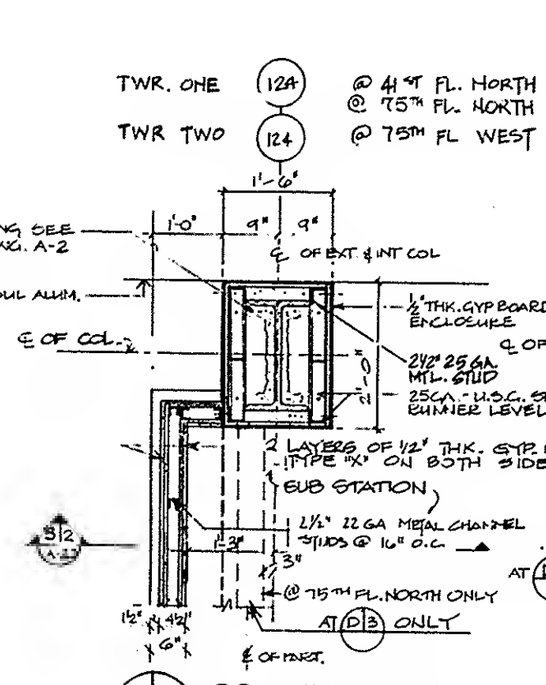

D 2 — CORNER DETAIL

SCALE IN FEET 0 1 2 3

D 3 — DETAIL SIMILAR

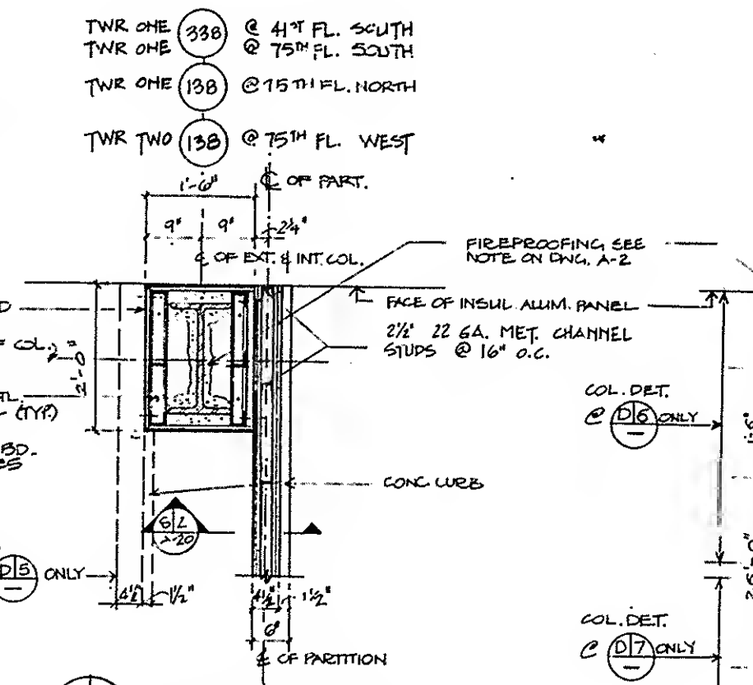

D 4 — CORNER DETAIL

SCALE IN FEET 0 1 2 3

D 5 — DETAIL SIMILAR

D 6

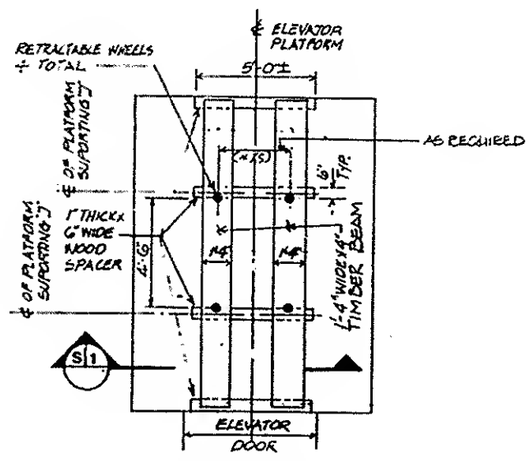

P 1 — PART PLAN

SCALE IN FEET 0 4 8

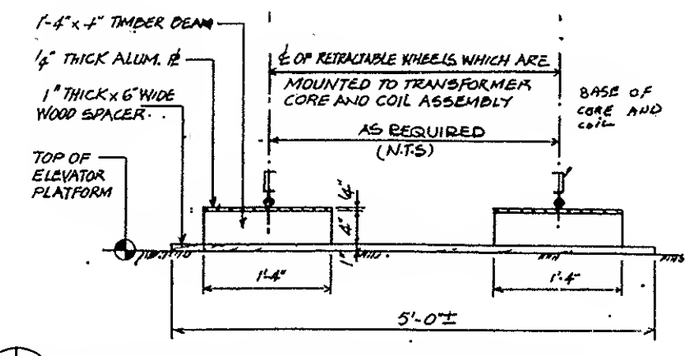

S 1 — CRIBBING DETAIL AT PLATFORM OF ELEVATORS NO. 6 AND 17

SCALE IN FEET 0 1 2

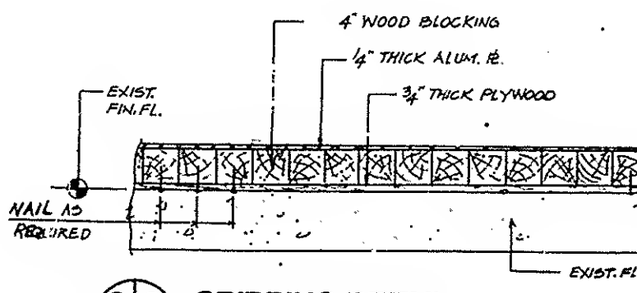

S 2 — CRIBBING DETAIL

SCALE IN FEET 0 1 2

NOTES

1. F
S
2. F
A
B
A
3. F
S